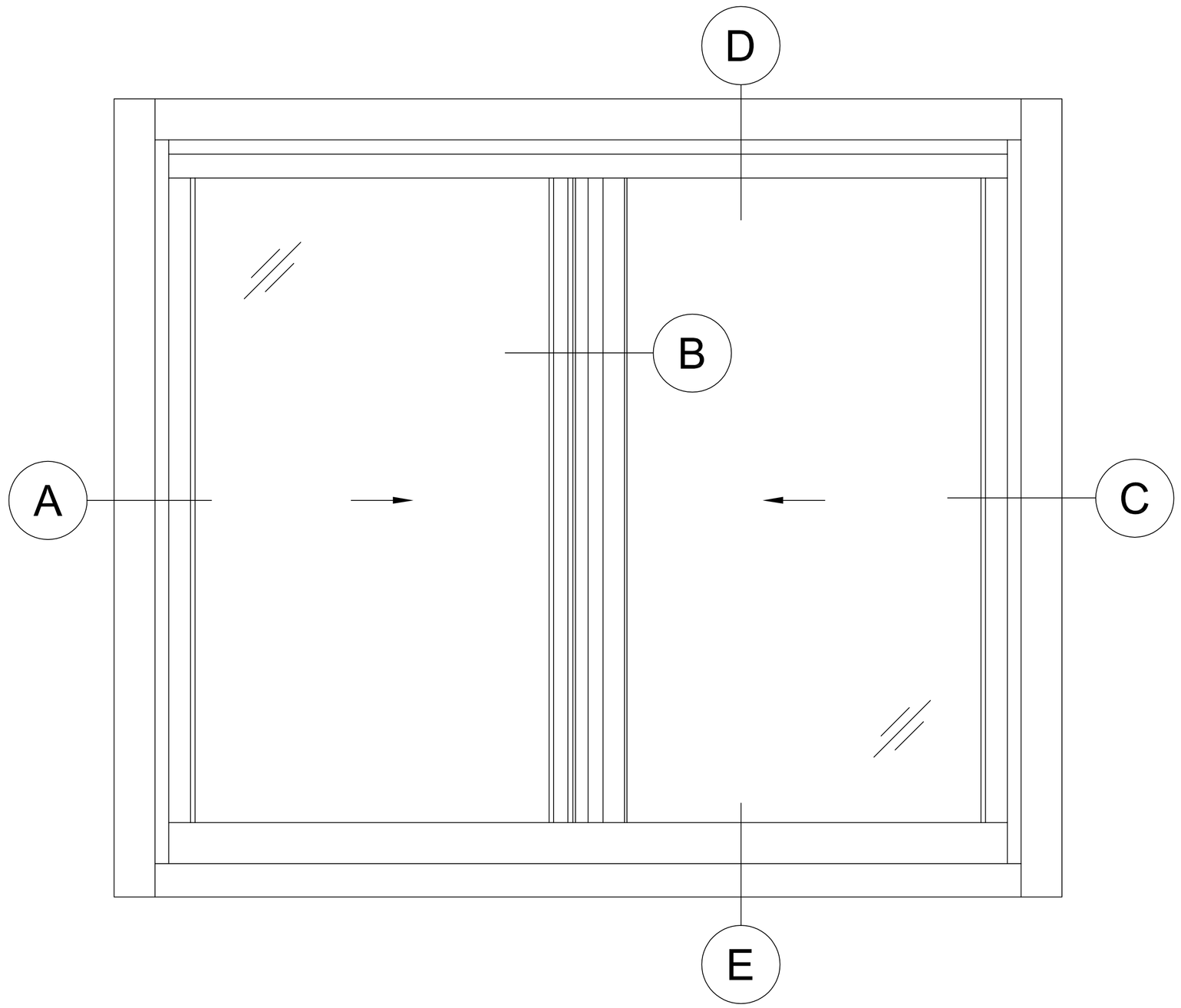

1 CITIQUIET INTERIOR SLIDER WINDOW

EXTERIOR VIEW

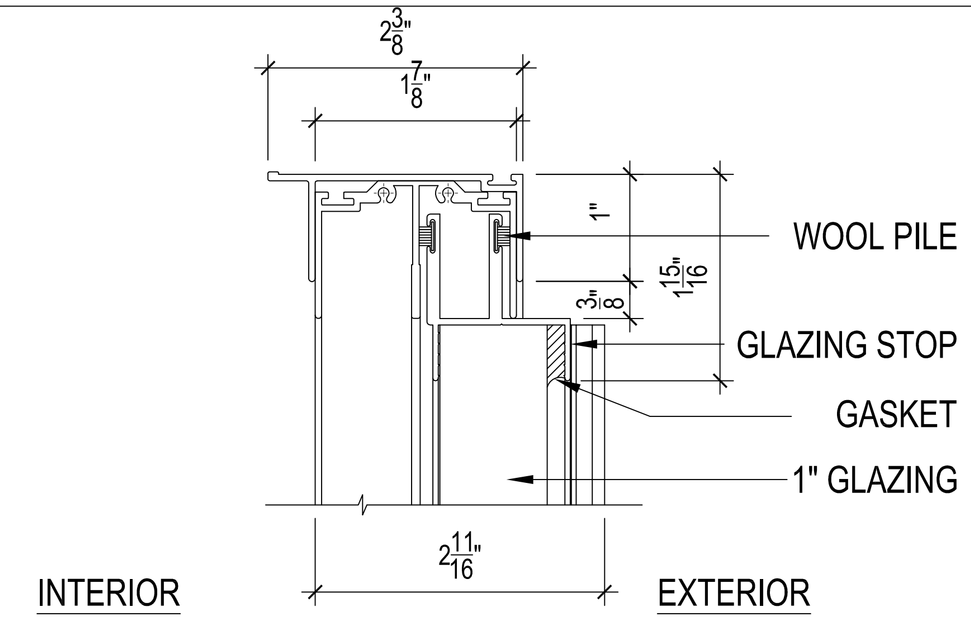

D CITIQUIET INTERIOR SLIDER HEADER DETAIL

SCALE:1" = 1"

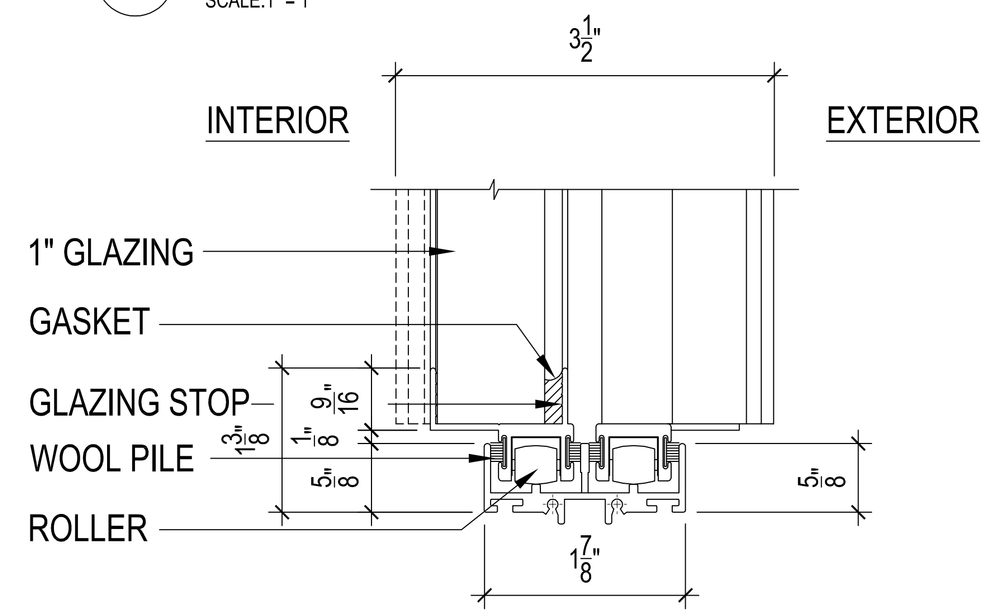

E CITIQUIET INTERIOR SLIDER SILL DETAIL

SCALE:1" = 1"

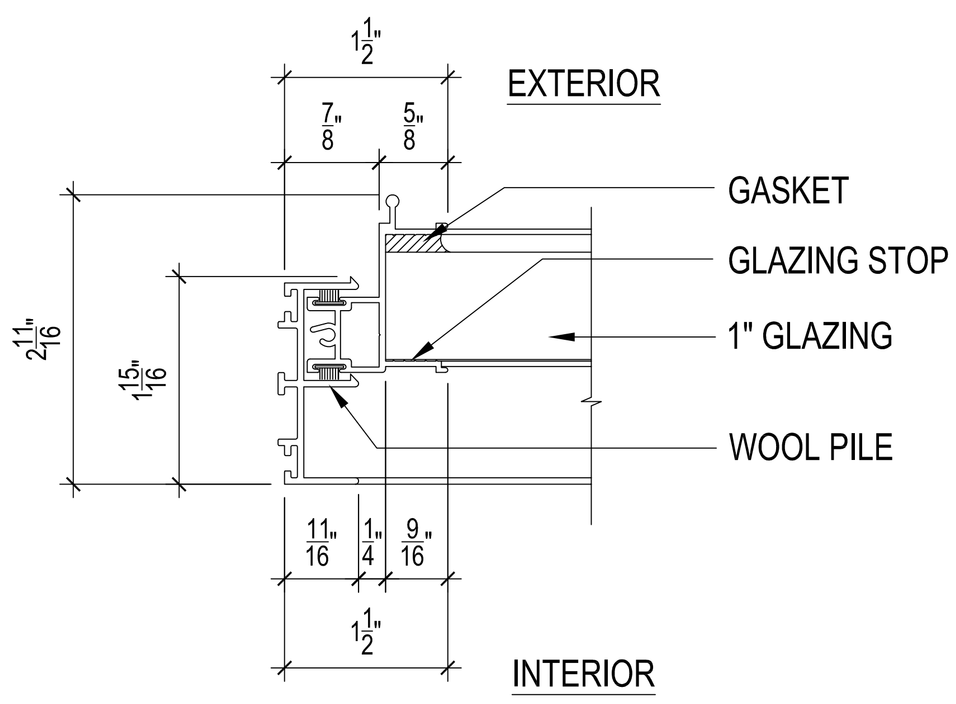

A CITIQUIET INTERIOR SLIDER JAMB DETAIL

SCALE:1" = 1"

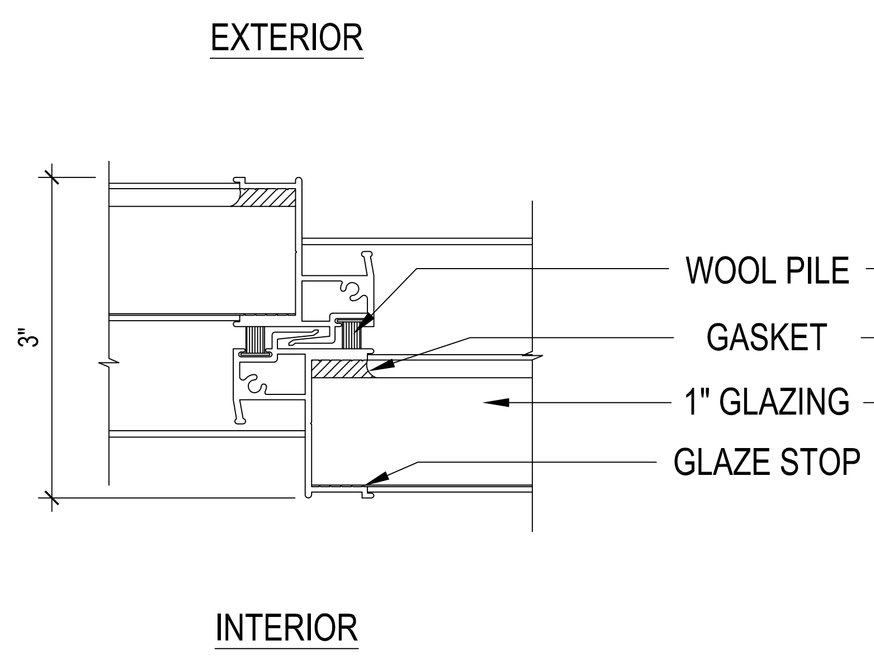

B CITIQUIET INTERIOR MEETING RAIL DETAIL

SCALE:1" = 1"

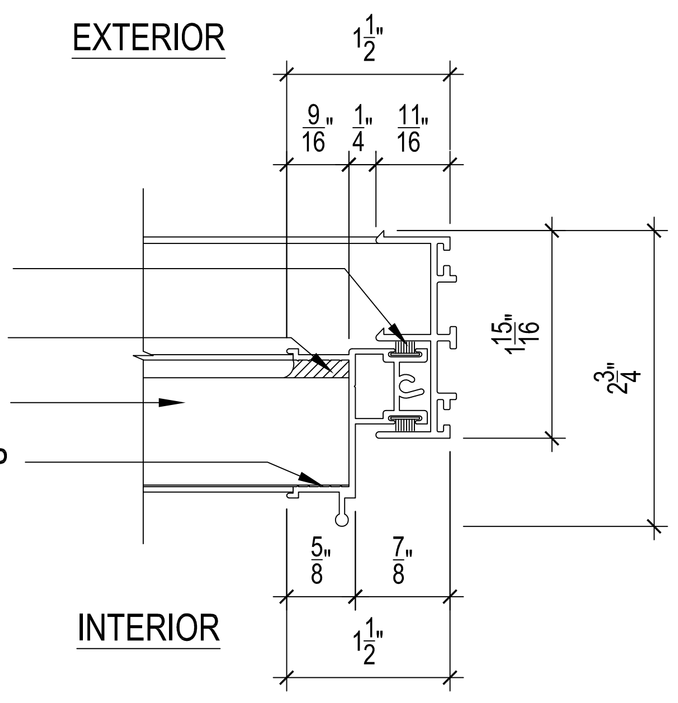

C CITIQUIET INTERIOR SLIDER JAMB DETAIL

SCALE:1" = 1"

NOTES:

REVISIONS:

CITIQUIET
11-11 43rd ROAD
Long Island City, New York 11101
718 752-0490 FAX 718-752-0494

INTERIOR SLIDER WINDOW ELEVATION AND DETAILS

Date: 07.11.2019	SHEET NO.
Project NO.	3
Scale: AS NOTED	
Drawn by: MD	
Approved by:	